VERSA DESK®

Specification Sheet

Foundry Bench U-Shaped Desk
FBU

Key Features

- Liftsup to 550 Lbs.
- Desktop raises from 30” to 50”
- Motorized Lift
- Push Button Adjustment
- Solid ¾” Real Natural Bamboo desktop
- Top Surface: 12” deep with three access grommets monitor mounts
- Main Surface: 19” deep with pre drillmounting for all accessories
- Frame: Extra thick 1-¾” Steel squaretubing, 3/16” thick steel mounting plates
- Patent pending 28 roller bearing steel carriage for extra smooth travel
- Drive motors: DC low voltage heavy-duty commercial grade linear track actuatorswith 600 newtons force
- Control Switch: Illuminated up/down with USB charging with / child proof, disable
- USA Made: Los Angeles California
- Warranty: LIFETIME Parts Program

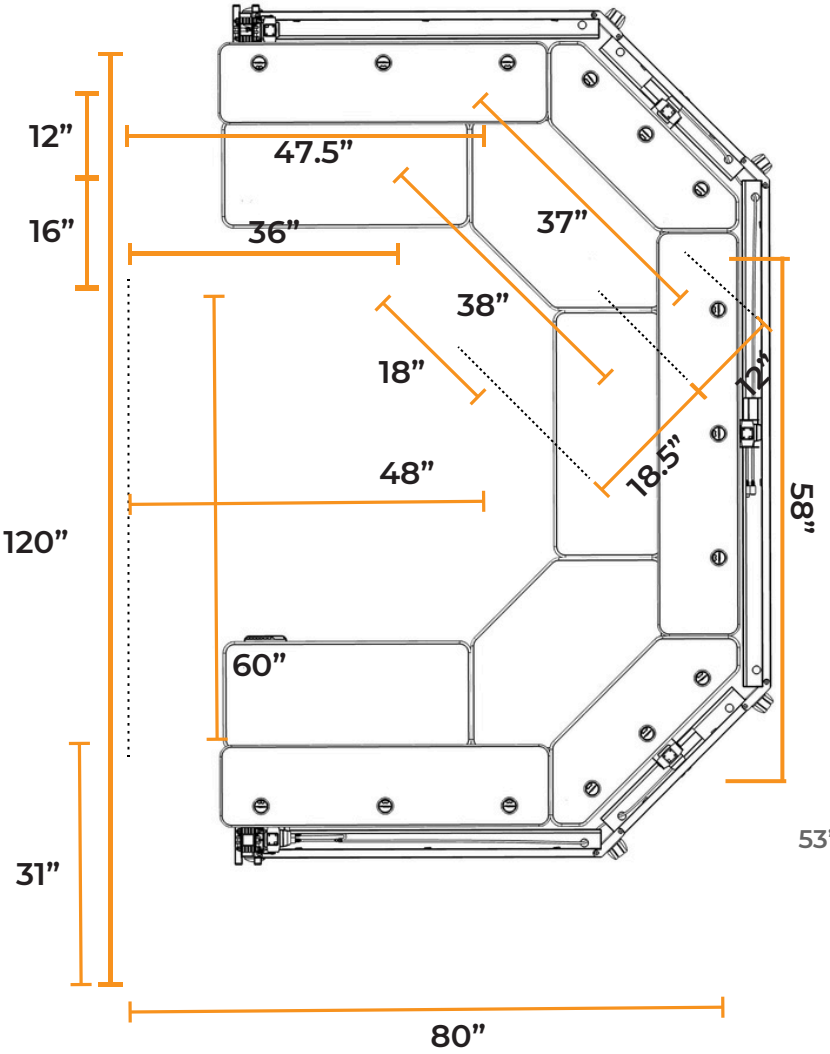

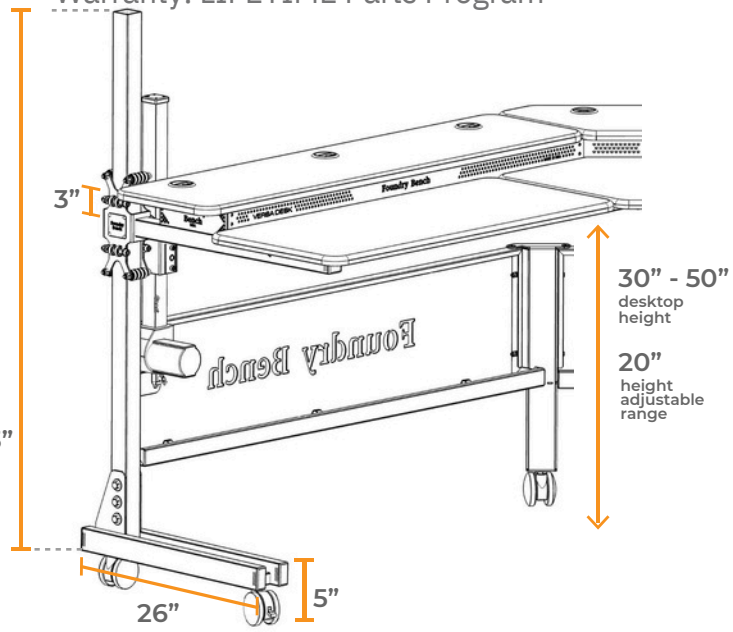

(800) 465-1660
www.versadesk.com
14108 Towne Ave.
Los Angeles, CA 90061

Lifetime Warranty | Quantity Discounts | Assembled in USA | Fast Shipping