VERSA DESK®

Specification Sheet

Triad Drafting Table

TRTD

Key Features

- All-electric drafting angle adjustment, automatically tilts surface from 0° to 30° at the push of a button
- Legset with quick, whisper-quiet up/down motion effortlessly lifts 200+ lbs of equipment from 28.5'' to 45.5" height
- Quick up/down motion, Speed: 36mm/1.4" per second
- 1.50" Thick Natural Bamboo Surface
- Height Range 28.5''-45.5''
- Legset Stroke 2662mm/ 26"
- Scratch/ Dirt Resistant Powder Coat
- BIFMA Certified
- Made in USA
- OEM available
- LifeTime Warranty / Free Parts Program

Color Options

Black

White

RATED

400 lbs
Weight Capacity

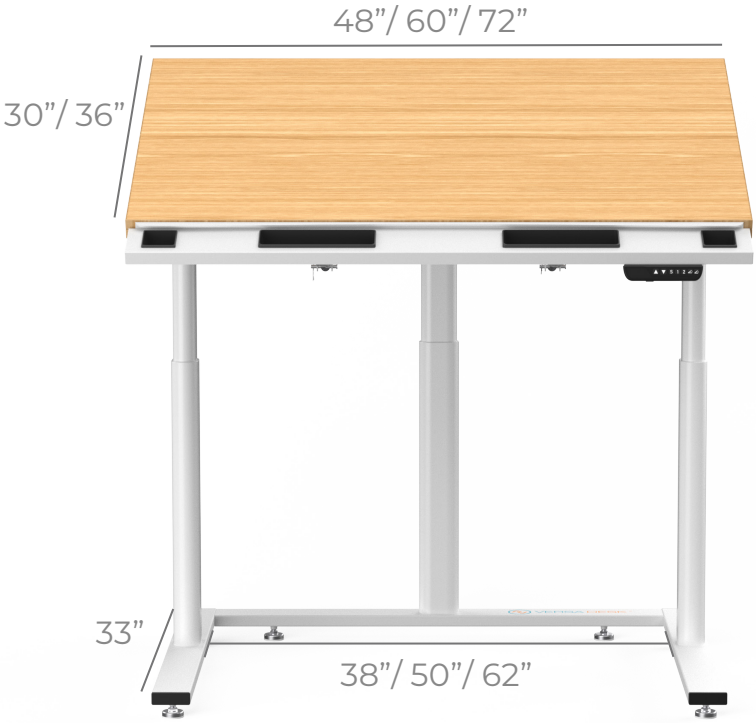

(800) 465-1660
www.versadesk.com
14108 Towne Ave.
Los Angeles, CA 90061

Lifetime Warranty | Quantity Discounts | Assembled in USA | Fast Shipping